# College of Engineering Trivandrum

Department of Electronics and Communication Engineering

**ECL332 Communication Engineering Laboratory**

**Experiment No. 6**

**Delta Modulation and Demodulation (Hardware)**

**Name:** _____ **Roll No.:** _____

**Date:** _____ **Batch:** _____

## 1. Aim

To design and set up a **delta modulator** and a **delta demodulator** and verify the waveforms using a DSO.

## 2. Learning Outcomes

After completing this experiment, the student will be able to:

- Explain delta modulation as a **1-bit DPCM** technique and describe its encoder/decoder blocks.
- Relate **step size** ($\Delta$) and **sampling/clock rate** to **slope overload distortion** and **granular noise**.
- Build the modulator using comparator + latch/flip-flop + accumulator (feedback integrator).
- Recover the signal using a **low-pass filter** based demodulator and compare with the input.
- Identify and justify each intermediate waveform on the DSO.

## 3. Prerequisites

- Comparator operation (IC311) and reference setting
- D flip-flop operation (IC7474), TTL clock levels (0–5V)
- Op-amp basics (IC741), integrator/accumulator idea
- RC low-pass filter cutoff $f_c = \dfrac{1}{2\pi RC}$
- Function generator + DSO triggering and scaling

## 4. Apparatus / Components

**Instruments:**

- Function generator (message signal)
- Function generator / TTL output for clock (or same generator in TTL mode)
- Dual power supply (for ±15 V and +5 V rails as needed)
- Digital Storage Oscilloscope (DSO), probes
- Breadboard and connecting wires

**ICs:**

- IC311 (Comparator)
- IC7474 (D flip-flop)

- IC741 (Op-amp)

  **Passive components (typical as per circuit/design):**
- Resistors: 100 kΩ, 15 kΩ, 10 kΩ, 5.6 kΩ, 1 kΩ (as required)
- Capacitors: 0.01 $\mu$F, 0.1 $\mu$F (as required)
- Potentiometer / reference arrangement (if provided) : _____

## 5. Safety & Precautions

- Ensure **common ground** between power supply, function generator, and DSO.
- Verify IC pinouts and supply rails **before** powering ON.
- Maintain TTL clock levels strictly within **0–5V** for IC7474.
- Keep message signal offset such that $V_{\min} \geq 0$ if the circuit expects unipolar input.
- Avoid loose connections: DM circuits are sensitive to noise and grounding.

## 6. Theory

### 6.1 Delta Modulation principle

Delta Modulation (DM) is a simplified form of DPCM in which only the **difference** between successive samples is encoded. It uses **1-bit quantization**, so the transmitted stream is a **1-bit** sequence indicating whether the signal has increased or decreased.

At each sampling instant (clock tick), the input $m(t)$ is compared with a locally generated approximation $\hat{m}(t)$ (feedback signal).

- If $m(t) > \hat{m}(t)$, the encoder outputs a **1** (step up).
- If $m(t) < \hat{m}(t)$, the encoder outputs a **0** (step down).

The feedback accumulator updates $\hat{m}(t)$ by a fixed step size $\Delta$ each clock period, producing a staircase approximation.

### 6.2 Distortions in DM (what you should observe)

- **Slope overload distortion:** If $\Delta$ is too small (or clock rate too low), the staircase cannot follow steep slopes of $m(t)$.
- **Granular noise:** If $\Delta$ is too large, the staircase "hunts" around slowly varying regions, causing ripple/noise.

### 6.3 Block diagrams

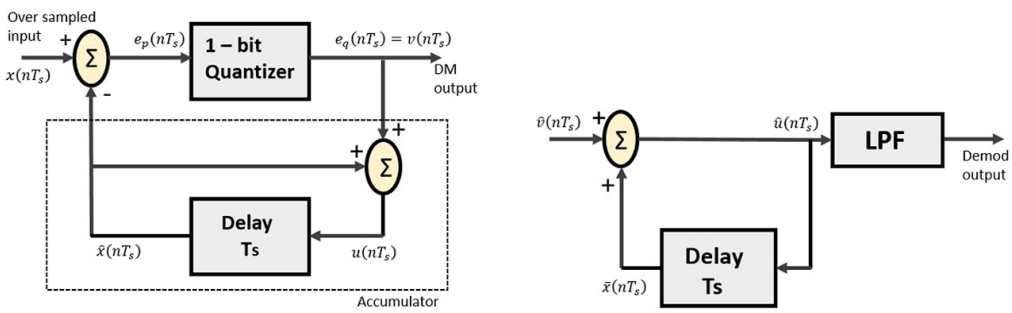


(a) (b)

Figure 1: Block diagrams of (a) Delta Modulator and (b) Delta Demodulator.

### 6.4 Delta Modulated Signal

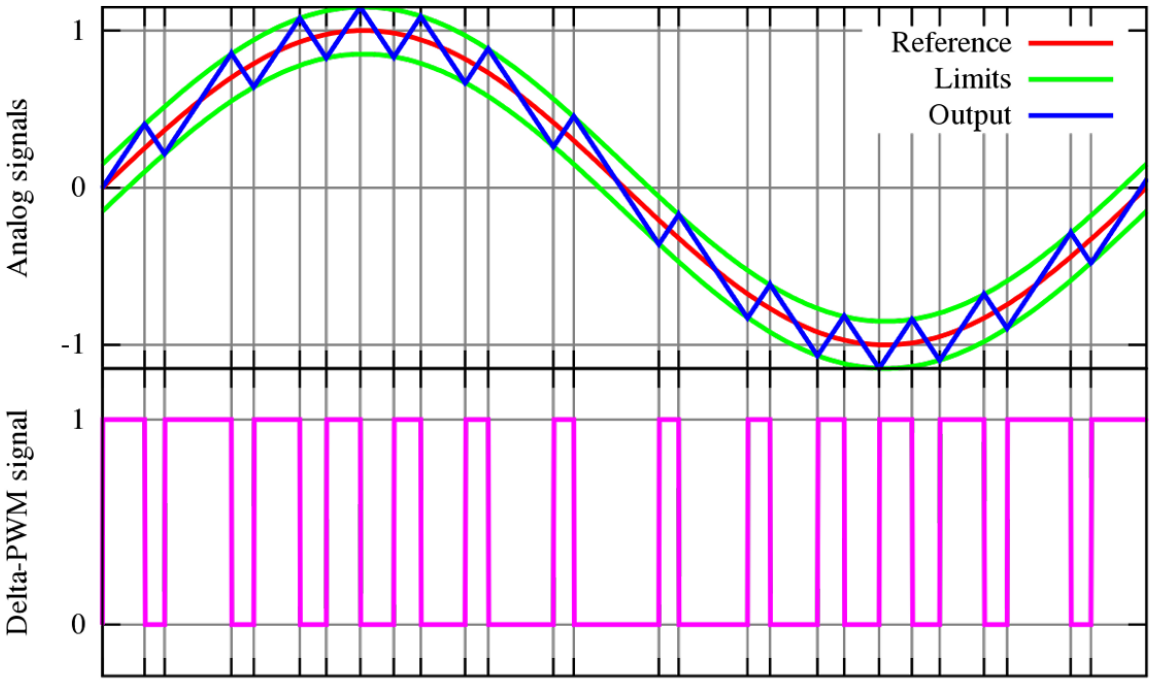


Figure 2: Delta Modulated Signal.

## 7. Design

### 7.1 Modulator design notes

Let the input (message) be a sine wave of amplitude 5 V and frequency 200 Hz:

$$m(t) = 5\sin(400\pi t)$$

Maximum slope:

$$\left(\frac{dm(t)}{dt}\right)_{\max} = 2\pi f A = 2\pi \times 200 \times 5 = 2000\pi$$

To avoid slope overload error:

$$\frac{V_{CC}}{RC} > E_m \omega_m$$

With $V_{CC} = 15$ V and $C = 0.01\,\mu$F, gives $R < 288\,\mathrm{k}\Omega$; choose

$$R = 100\,\mathrm{k}\Omega.$$

Also, a reference level is set as:

$$\frac{V_{CC} R_2}{R_1 + R_2} = 1.35 \text{ V},$$

choose $R_2 = 1\,\mathrm{k}\Omega$ and $R_1 = 10\,\mathrm{k}\Omega$.

### 7.2 Demodulator design notes

Demodulator is a low pass filter (LPF). The design condition:

$$f_m < \frac{1}{2\pi R_2 C_2}.$$

Choose $C_2 = 0.1\,\mu$F and $R_2 = 5.6\,\mathrm{k}\Omega$.

## 8. Circuit Diagram

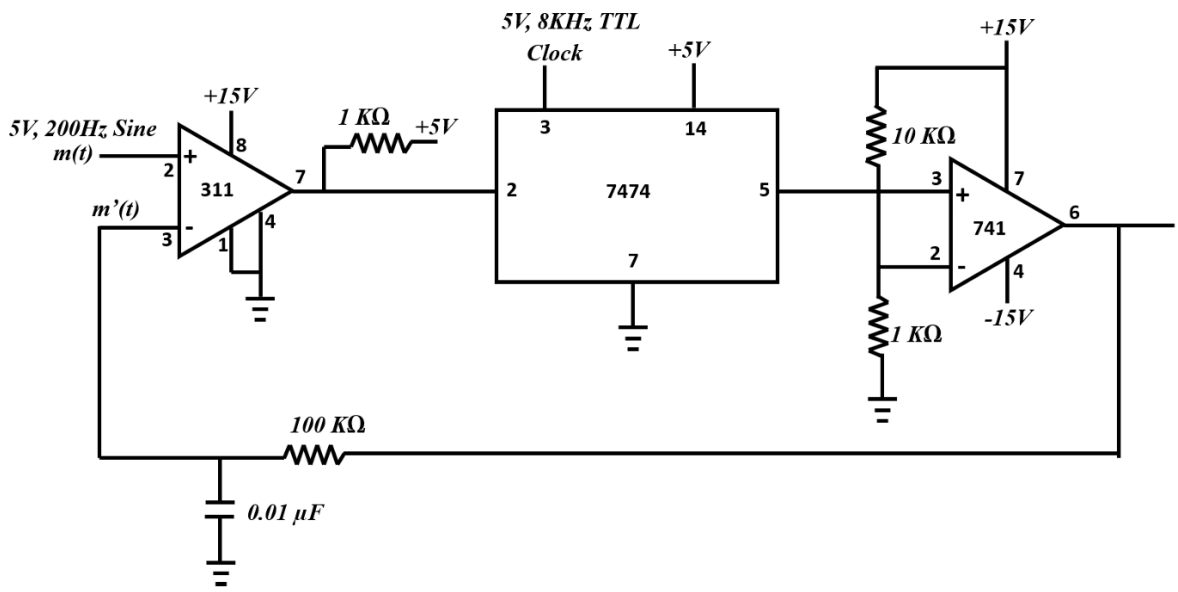


Figure 3: Circuit for delta modulator.

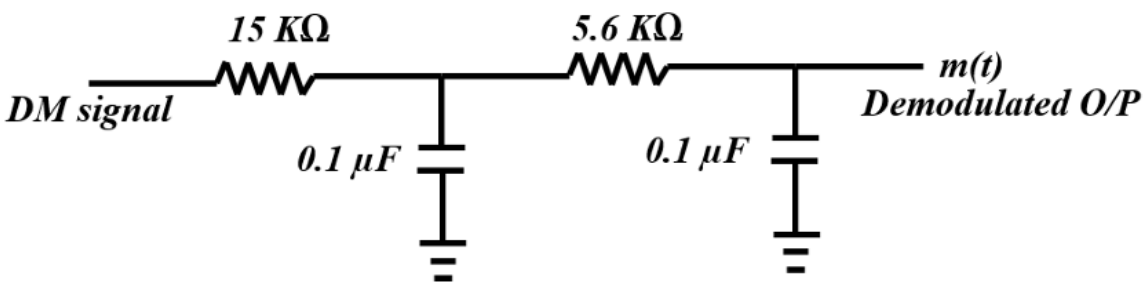


Figure 4: Circuit for delta demodulator (LPF).

## 9. Pre-Lab Questions

1. What is the slope of the signal $m(t) = 5\sin(400\pi t)$?.

2. With $V_{CC} = 15$ V and $C = 0.01\,\mu$F, compute the maximum allowed $R$ from the given slope overload condition (show steps).

3. For $R_2 = 5.6\,\mathrm{k}\Omega$ and $C_2 = 0.1\,\mu\mathrm{F}$, compute LPF cutoff frequency $f_c$.

4. Explain why increasing clock frequency reduces slope overload.

5. Differentiate between slope overload distortion and granular noise (2 points each).

## 10. Procedure

1. Generate the **message signal** using function generator. Ensure that the **offset is DC** and the message has $V_{pp} = 5$ V such that $V_{\max} = 5$ V and $V_{\min} = 0$ V.
2. Make all the connections for **IC311** as per the circuit.
3. Generate the **clock pulse** for **IC7474**. The clock must satisfy $V_{\max} = 5$ V and $V_{\min} = 0$ V. (Tip: switch function generator mode to **TTL** and use the TTL output.)
4. Make all connections for **IC7474 and IC741** and complete the modulator circuit.
5. Check the output of **all stages** using a DSO (test points listed in Observations).
6. Set up the **demodulator** circuit (LPF) and connect the DM output to it.
7. Observe and record the **demodulated output** in the DSO. Compare it with the input message signal.

## 11. Observations

### 11.1 Waveform checkpoints (sketch)

(a) Output of IC311:

(b) Output of IC7474:

(c) Delta modulated signal (DM output):

(d) Feedback signal $\hat{m}(t)$ / $m'(t)$:

(e) Demodulated output:

(f) Input $m(t)$ and DM output (overlay):

## 12. Calculations / Design Verification

1. Compute LPF cutoff:

$$f_c = \frac{1}{2\pi RC}$$

   Given $R =$ _____, $C =$ _____, $f_c =$ _____ Hz.

2. Compute the reference voltage (if applicable):

$$V_{ref} = \frac{V_{CC} R_2}{R_1 + R_2}$$

   Given $V_{CC} =$ _____, $R_1 =$ _____, $R_2 =$ _____, $V_{ref} =$ _____ V.

3. Note on distortions observed (tick/describe):
   - Slope overload distortion observed? ☐ Yes ☐ No Where? _____
   - Granular noise observed? ☐ Yes ☐ No Where? _____

## 13. Result

*(Write a 2–3 line result statement based on your observation:)*

## 14. Inference / Discussion

*(What have you understood from this experiment?)*

## 15. Viva / Post-Lab Questions

1. What is the role of comparator (IC311) in the modulator?

2. Why is a flip-flop (IC7474) used? What does it ensure?

3. What is the feedback signal $\hat{m}(t)$ and how is it generated?

## 16. Troubleshooting Checklist

- No DM output: check clock level (0–5V TTL), IC7474 power pins, and common ground.
- Comparator output stuck: verify IC311 reference and input offset (ensure $0 \leq m(t) \leq 5$ V if required).
- Very noisy demodulated output: check LPF component values and wiring, reduce step size or increase clock rate.
- Severe tracking error: possible slope overload; increase clock frequency or effective step size.

---